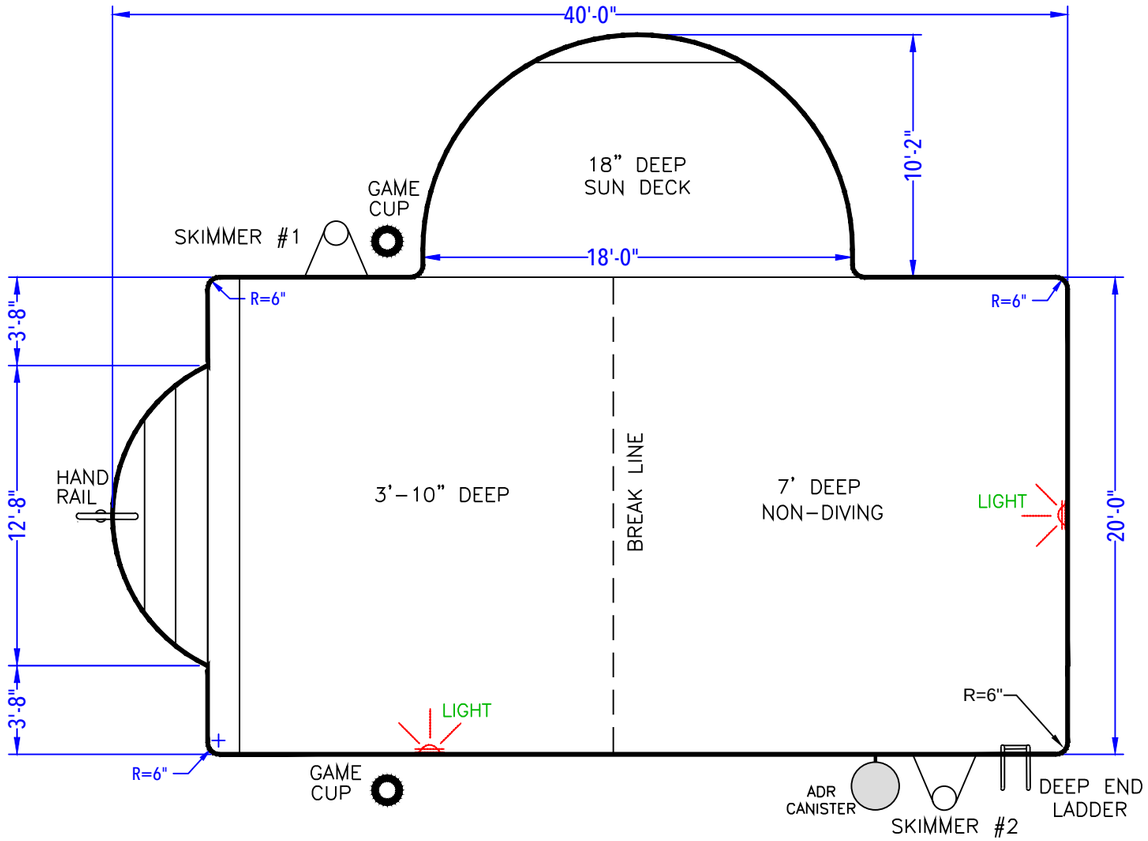

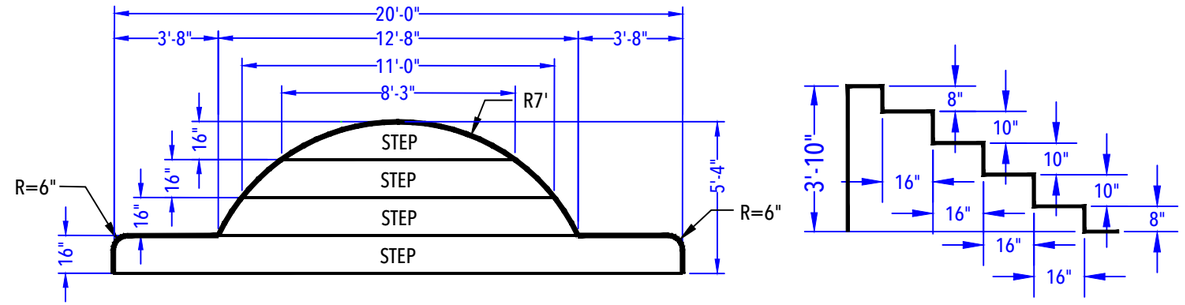

ENTRY STEP DETAIL
(After Concrete & Liner)
N.T.S.

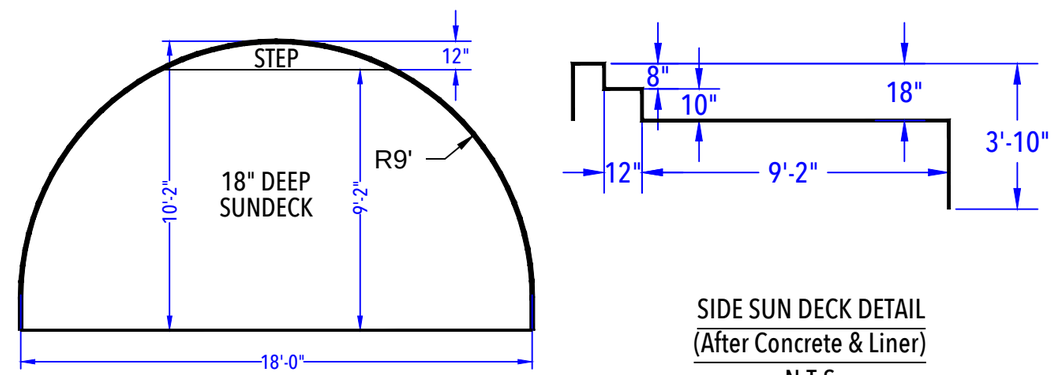

SIDE SUN DECK DETAIL
(After Concrete & Liner)
N.T.S.

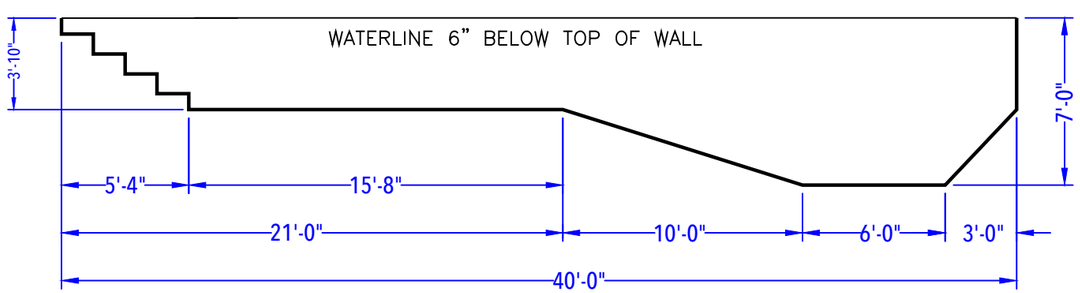

DEPTH DETAIL

CUNARD - 45 Bowmans Drive

20' x 40' - 10" Concrete Wall - Roman
Vinyl Covered Step & 10' x 18' Sun Deck
Pool Perimeter = 127' Pool Area = 905 S. F.
Approximate Gallons of Pool:27,480 Gallons

BUYER SIGNOFF

By signing below, Buyer states that he/she has reviewed all items that are detailed on this Pool Layout Plan. Buyer further acknowledges that the manner in which all depths are showcased is approved along with location and placement of all specified items as detailed herein. This Pool Layout Plan requires a signature from Management for it to be valid and accepted by Seasonal World. Seasonal World reserves the right to alter, amend and/or change anything listed herein. Seasonal World is not responsible for any typographical errors and/or omissions. In the event that a product and/or service is listed on this Pool Layout Plan and it has not been paid for via the Contact or a Contract Addendum, this does not entitle the Buyer to receive said product and/or service. Product and/or service must be purchased and paid for in order for Seasonal World to provide it to the Buyer, unless otherwise specified in writing.
THUS, BY SIGNING BELOW BUYER APPROVES THE POOL LAYOUT PLAN AS DETAILED HEREIN AND BUYER IS IN AGREEMENT WITH THE TERMS AND CONDITIONS AS SET FORTH HEREIN.

X
Buyer(s) Signature Date

X
Seasonal World Representative Date

X
Seasonal World Management Date

POOL LAYOUT PLAN

JOB #: 555041
DATE: 08-05-2015
SCALE: 1' = 1/6"
DRAWN BY: CC

NO.	REVISION	DATE

SEASONAL WORLD
WE BUILD BACKYARDS!