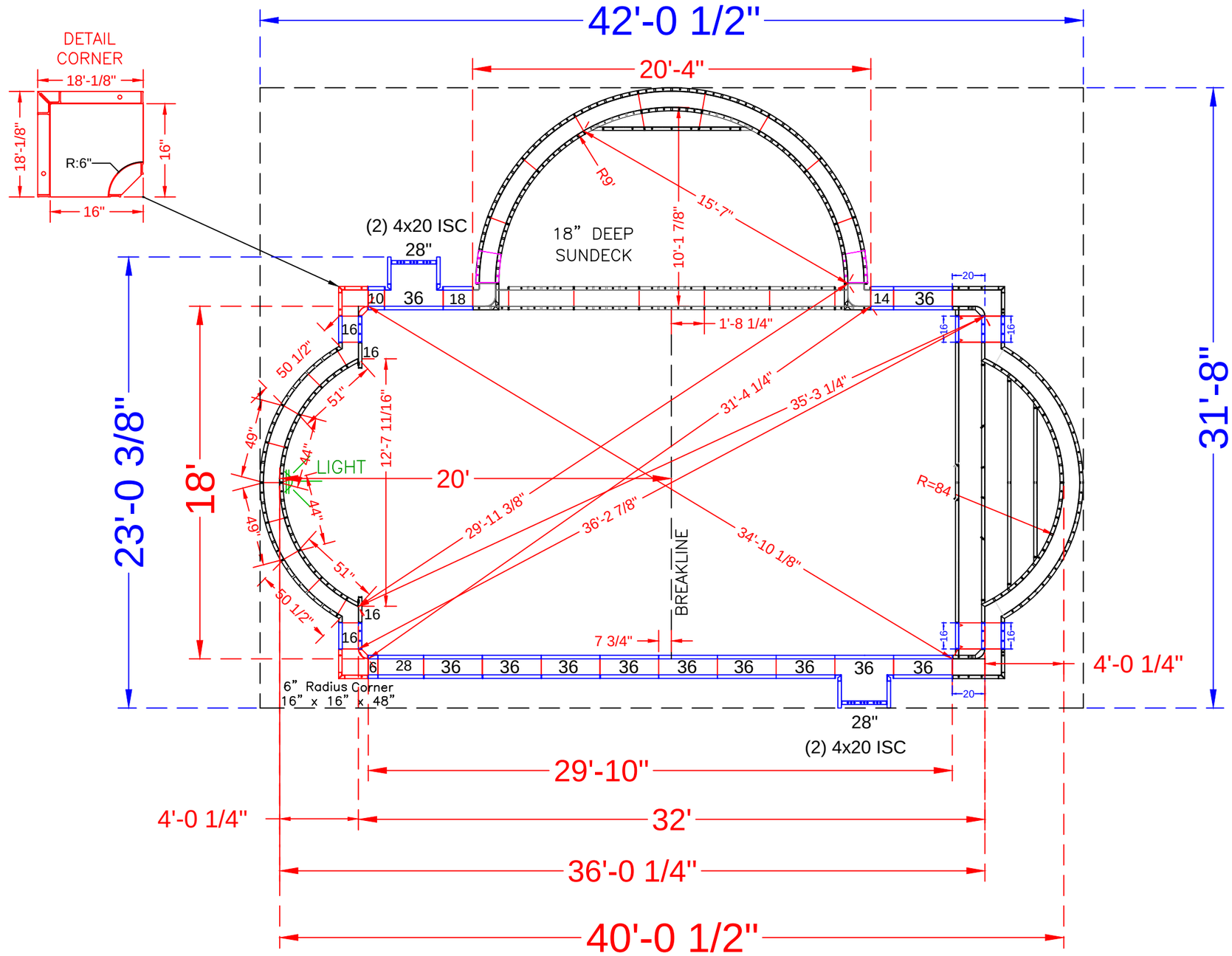

*NOTE: SEE CONSTRUCTION DRAWINGS FOR POOL LOCATION

POOL PANEL DESCRIPTIONS

	QTY.	DESCRIPTION
See Detail Page }	1	18' Roman End Step Assembly
See Detail Page }	1	18' x 10'-2" Side Sundeck Assembly
Skimmer Sides }	4	4" x 20" x 48" Adj Offset Hinged ISC (Pilaster)
Corners }	2	16" x 16" x 48 w/ Outside Corner-SA (6" Radius)
		Straight Panels
	2	6" x 48" Panel
	2	10" x 48" Panel
	2	14" x 48" Panel
	8	16" x 48" Panel *Includes 2 for Step (8 total)
	2	18" x 48" Panel
	4	28" x 48" Panel
	20	36" x 48" Panel

QTY.	DEEP END ROMAN RADIUS PANEL DESCRIPTION
2	49" x 48" - 94"Radius Outside Panel
2	44" x 48" - 84"Radius Inside Panel
2	51" x 48" - 84"Radius Panel
2	50 1/2" x 4" x 48" - 94"Radius / Outside

GOETZ - 17 Cherry Tree Lane
Roman - Concrete Wall / Vinyl Liner
w/ 10' x 18' Vinyl Covered Sundeck
& 18' Wide Vinyl Covered Roman End Step
Pool Perimeter = 797' Pool Area = 118 S. F.
Approximate Gallons of Pool: 24,270 Gallons

Concrete Yards
- Pool Walls & Steps: 20.5 yards (19.2 exact)

PANEL LAYOUT

JOB #: 555096
DATE: 5-15-2016
DRAWN BY: SA

REVISIONS		

SEASONAL WORLD
WE BUILD BACKYARDS!

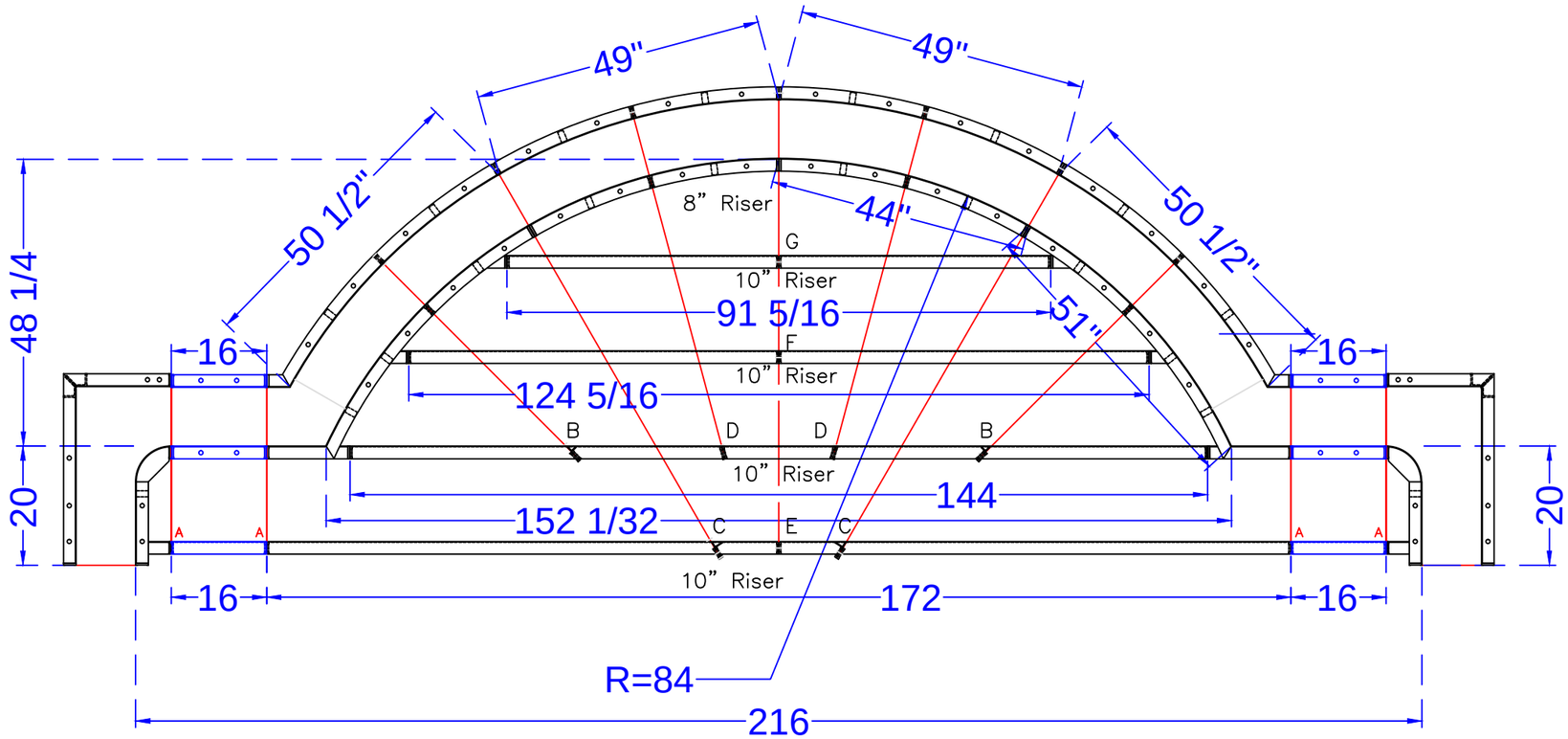

Qty (4) Bottom Sides 26" Full Tie — 29 5/16 (A)

Qty (2) 2nd Bottom Sides 43 5/16" Tie — 48 11/16 (B)

Qty (2) Bottom Middle 71 1/16" Tie — 76 9/32 (C)

Qty (2) 2nd Bottom Middle 56 7/8" Tie — 61 3/32 (D)

Qty (2) Bottom Center 74 1/8" Tie — 78 1/4 (E)

Qty (1) 2nd Top Center 42 1/8" Tie — 46 1/4 (F)

Qty (1) Top Center 26 1/8" Tie — 30 1/4 (G)

STEP PANEL DESCRIPTIONS

7' RADIUS ROMAN END STEP WITH 8" AND 10" RISERS	
QTY.	DESCRIPTION
2	6x20 x 48 ISC Riser Side
2	16x30 x 48 OSC Form
2	51 x 4 x 38 - 84" Radius ISC Zee Riser Side
2	50 1/2 x 4 x 48 - 94" Radius OS Panel
2	44 x 8 - 84" Radius IS Panel Top Riser
2	49 x 48 - 94" Radius OS Panel
3	Risers - Top Center (1)91 5/16, (2)62 5/32
3	Risers - Bottom Center (1)144, (2)86
2	Risers - Bottom Outer Edge
2	16 x 48 SA Panel
2	16 x 38 SA Panel
2	16 x 10 SA Panel

GOETZ - 17 Cherry Tree Lane
Roman - Concrete Wall / Vinyl Liner
w/ 10' x 18' Vinyl Covered Sundeck
& 18' Wide Vinyl Covered Roman End Step
Pool Perimeter = 797' Pool Area = 118 S. F.
Approximate Gallons of Pool: 24,270 Gallons

Concrete Yards
- Pool Walls & Steps: 21 yards (19.25 exact)

STEP DETAIL

JOB #: 555096
DATE: 5-23-2016
SCALE: 1' = 1/2 "
DRAWN BY: SA

SEASONAL WORLD
WE BUILD BACKYARDS!

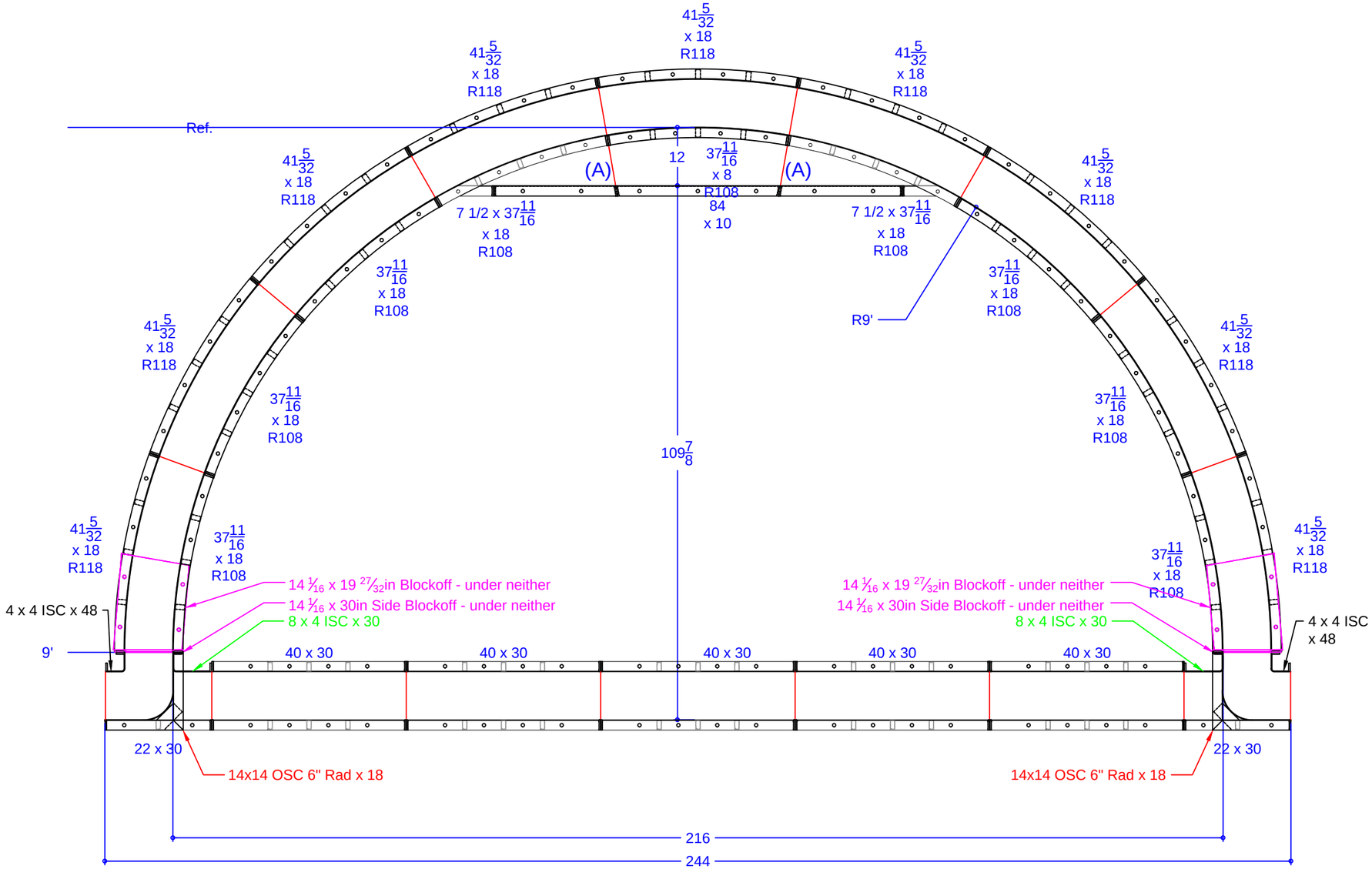

QTY.	DESCRIPTION
1	37 11/16 x 8 108R IS Panel - Top Riser
2	7 15/32 x 37 11/16 ISC Riser Side x 18 108R IS Panel
6	37 11/16 x 18 108R IS Panel
9	41 5/32 x 18 118R OS Panel
2	8 x 4 ISC x 30
2	4 x 4 ISC x 48
2	14 x14 OSC 6" Rad. x 18
1	84 x 10 Riser - 2nd Top
10	40 x 30 Wall Panel SA
2	22 x 30 Wall Panel SA
2	14 1/16 x 19 27/32 Blockoff
2	14 1/16 x 30 Blockoff

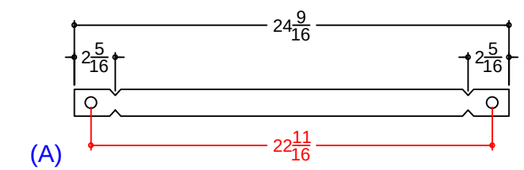

Qty(2) 20 1/2" Wall Tie - 2 Top Riser

Overall Length	Set	
24 9/16"	8.28	3

GOETZ - 17 Cherry Tree Lane
Roman - Concrete Wall / Vinyl Liner
w/ 10' x 18' Vinyl Covered Sundeck
& 18' Wide Vinyl Covered Roman End Step
Pool Perimeter = 797' Pool Area = 118 S. F.
Approximate Gallons of Pool: 24,270 Gallons

Concrete Yards
- Pool Walls & Steps: 21 yards (19.25 exact)

SUNDECK DETAIL

JOB #: 555096
DATE: 5-23-2016
SCALE: 1' = 1/2 "
DRAWN BY: SA

NO.	REVISION	DATE

SEASONAL WORLD
WE BUILD BACKYARDS!