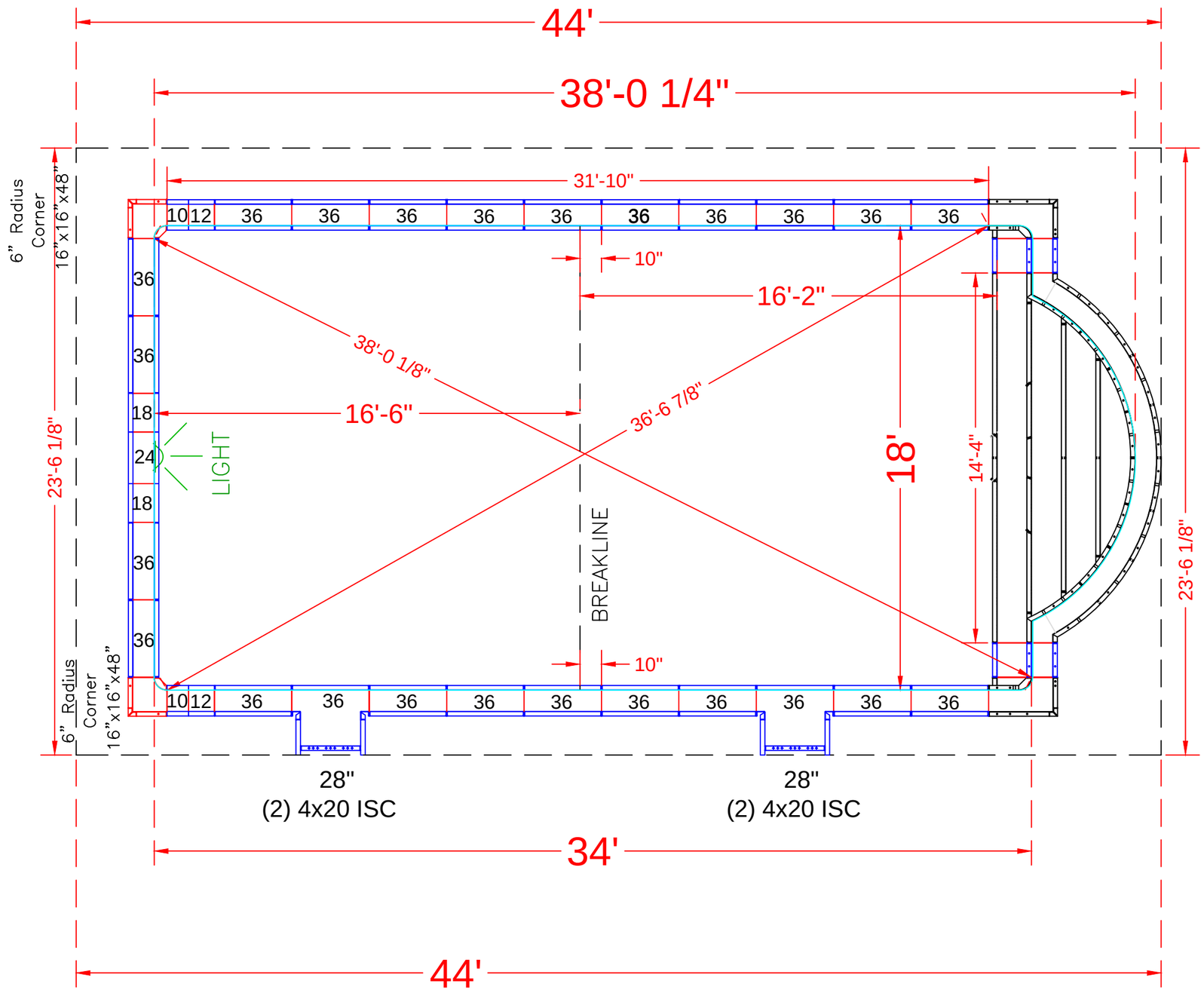

POOL PANEL DESCRIPTIONS

		OPTION 5 (ROMAN END AND STEPS)
	QTY.	DESCRIPTION
SEE DETAIL PAGE {	1	18' Wide Roman End Step Assembly
	2	16" x 16" x 48 w/ Outside Corner-SA (6" Radius)
SKIMMER SIDES {	4	4" x 20" x 48" Adj Offset Hinged ISC (Pilaster)
	4	10" x 48" Panel-SA
	4	12" x 48" Panel-SA
	4	18" x 48" Panel-SA
	2	24" x 48" Panel-SA (Light Panel)
SKIMMERS {	2	28" x 48" Panel-SA (Pilaster)
	46	36" x 48" Panel-SA

MCVETTY - 17 Governor Road

18' x 34' - 10" Concrete Wall
Single Roman End
w/ 18' Wide Roman End Vinyl Covered Step
Pool Perimeter = 107'
Pool Area = 649 S. F.
Approximate Gallons of Pool: 24,165 Gallons

Concrete Yards
- Pool Walls & Steps: 20 yards (19.12 exact)

PANEL LAYOUT

JOB #: 500188
DATE: 04-27-2013
SCALE: 1' = 1/8 "
DRAWN BY: SA & LH

REVISIONS		

SEASONAL WORLD
WE BUILD BACKYARDS!

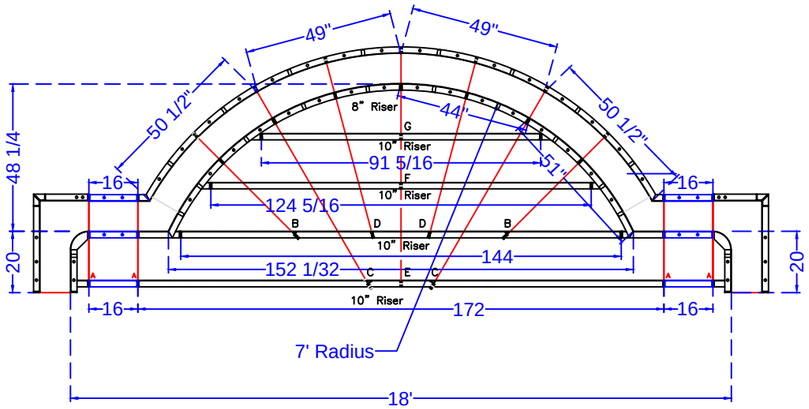

18' ROMAN END STEP ASSEMBLY SHOWN x 48

SCALE: 1' = 1/4"

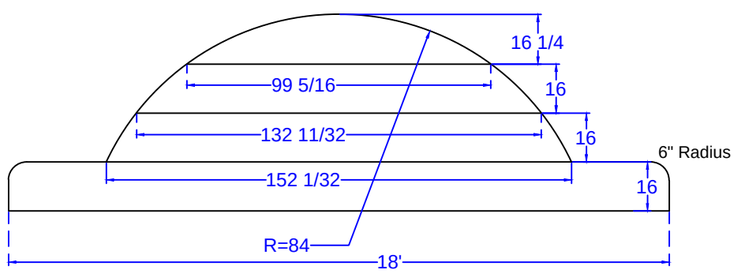

STEP DETAIL

SCALE: 1' = 1/4"

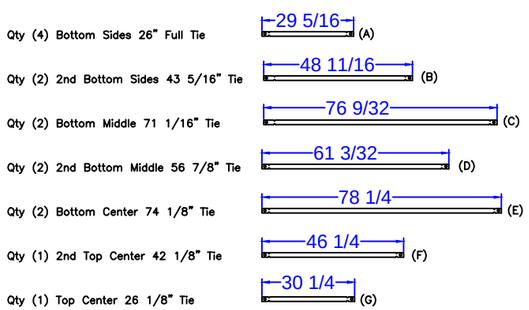

18' ROMAN END STEP - TIES

SCALE: 1' = 1/4"

STEP PANEL DESCRIPTIONS

7' RADIUS ROMAN END STEP WITH 8" AND 10" RISERS		
PAGE	QTY.	DESCRIPTION
2 of 18	2	6x20 x 48 ISC Riser Side
4 of 18	2	16x30 x 48 OSC Form
5 of 18	2	51 x 4 x 38 84 Radius ISC Zee Riser Side
8 of 18	2	50 1/2 x 4 x 48 94 Radius OS Panel
10 of 18	2	44 x 8 84 Radius IS Panel Top Riser
14 of 18	2	49 x 48 94 Radius OS Panel
16 of 18	3	Risers - Top Center (1)91 5/16, (2)62 5/32
17 of 18	3	Risers - Bottom Center (1)144, (2)86
18 of 18	2	Risers - Bottom Outer Edge
	2	16 x 48 SA Panel
	2	16 x 38 SA Panel
	2	16 x 10 SA Panel

MCVETTY - 17 Governor Road

18' x 34' - 10" Concrete Wall
Single Roman End
w/ 18' Wide Roman End Vinyl Covered Step
Pool Perimeter = 107'
Pool Area = 649 S. F.
Approximate Gallons of Pool: 24,165 Gallons

Concrete Yards
- Pool Walls & Steps: 20 yards (19.12 exact)

STEP DETAIL

JOB #: 500188
DATE: 04-27-2013
SCALE: 1' = 1/8 "
DRAWN BY: SA & LH

SEASONAL WORLD
WE BUILD BACKYARDS!